Captivated Push Buttons

Clippard also offers the captivated push button for use with a large variety of stem operated valves. Captivated push buttons are sold as kits, adaptable to either 3.2 diameter stems or 4.8 diameter stems. Each kit includes a colored acetyl push button, brass housing nut, 1.6 brass spacer, and lock washer for assembly. The standard furnished mounting nut has a bright chromate finish. Black chrome or nickel-plated finishes are also available by adding the suffix -BC or -ENP to the part number. Captivated push buttons can be used on individual stem operated valves or in panel mount application by omitting the 1.6 brass spacer. These push buttons are available in a variety of colors, allowing you to color code, or easily differentiate between valves when designing control systems. The design of these push buttons allows maximum actuation of the valve with no over-travel or side load to the valve stem. This assures superior performance and long life. Captivated push buttons are commonly used as limit valves in conjunction with pneumatic cylinders, slides, and any variety of mechanical actuators. The rugged design coupled with precise actuation of stem operated valves make it perfect for applications where repetitive cycling of the valve is necessary. Designed to work with Clippard M-MAV, M-MJV, and M-FV series, these push buttons integrate easily into Minimatic® systems, providing optimal quality and efficiency in miniature pneumatic control.

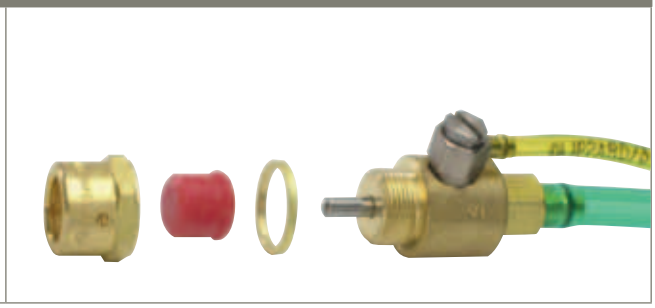

M - P C - ❑ ❑ (- ❑)

Metric

Push Button Captivated

Valve Stem dia.
1 3.2 dia.
2 4.2 dia.

Push Button Color
B - Black
G - Green
R - Red
W - White
Y - Yellow

Options
BC - Black Chrome
ENP - Electroless Nickel Plated

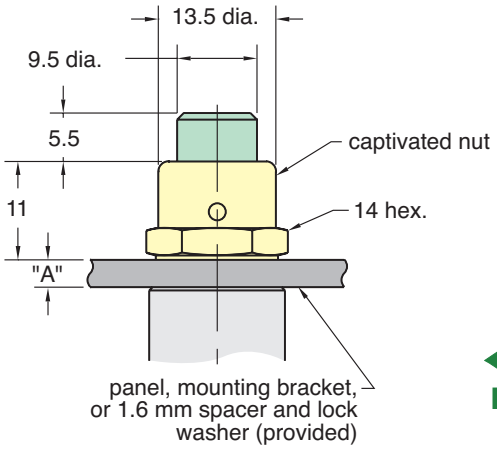

RoHS

Spacing Reduired for Proper Actuation of Push Button	
Valve	**"A" Dim.**
M-MAV-2, M-MAV-3 M-MAVO-2, M-MAVO-3	2.4
M-MAV-4, M-MAV-4D M-MJV-4, M-MJV-4D	4
M-MJV-2, M-MJV-3 M-MJVO-2, M-MJVO-3 M-FV-3, M-FV-5	5.5